DUOVORM

version
2018-1A

Dealer

TV-LIFT

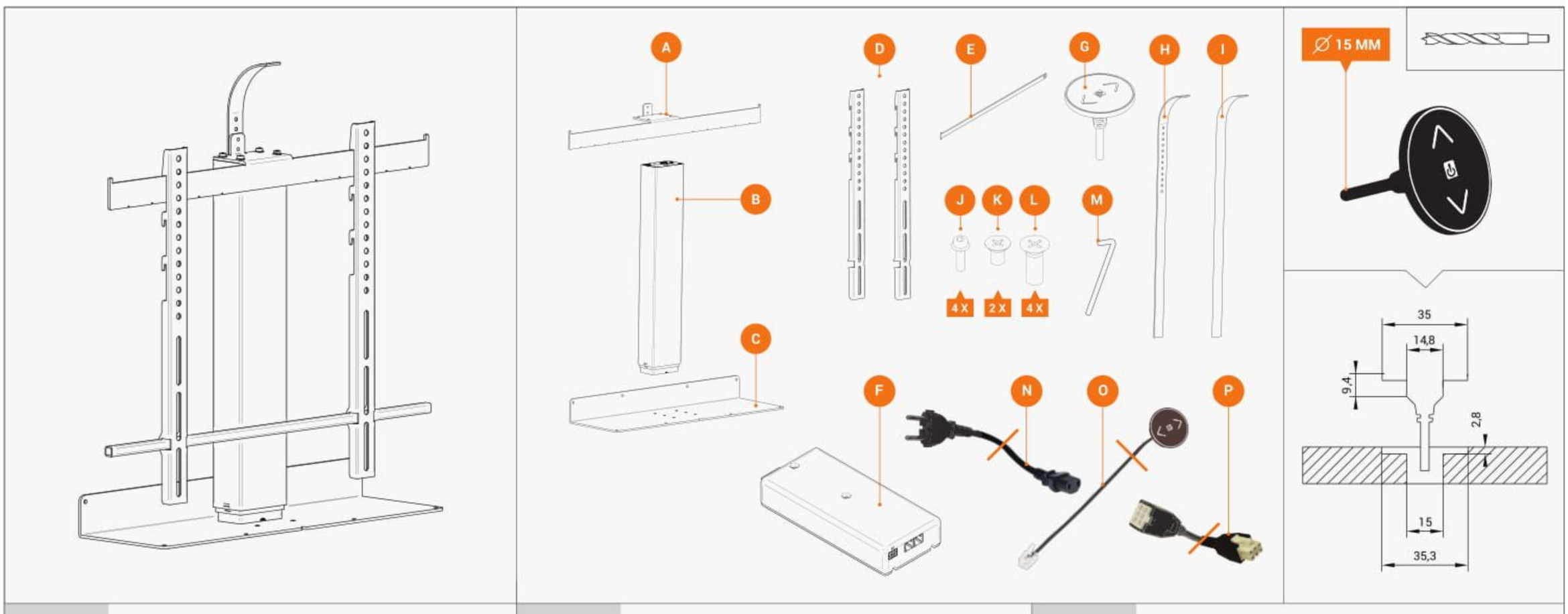

1

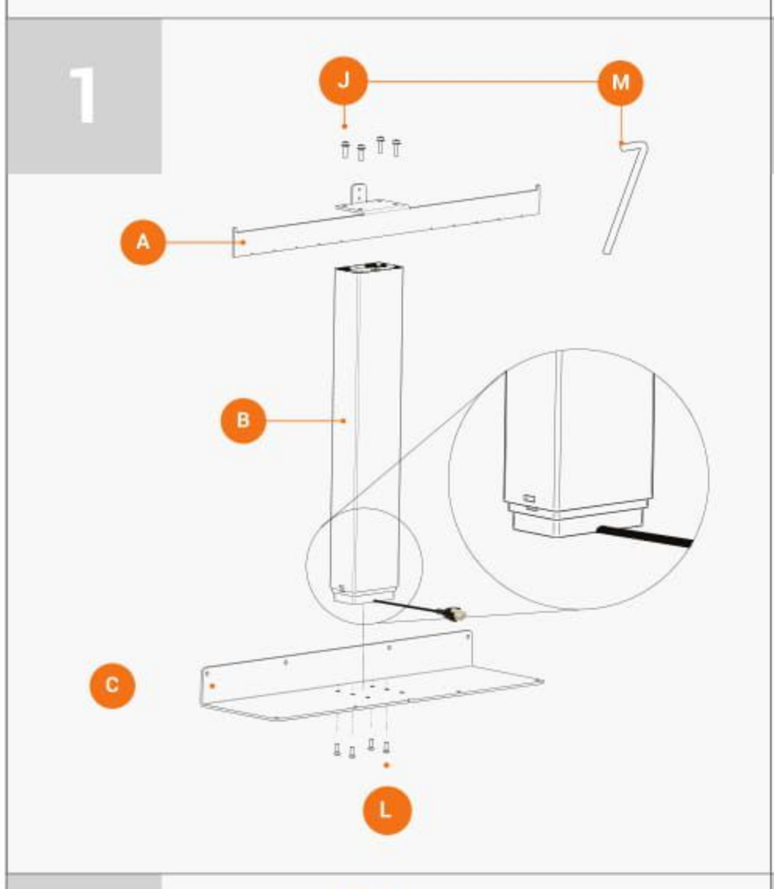

2

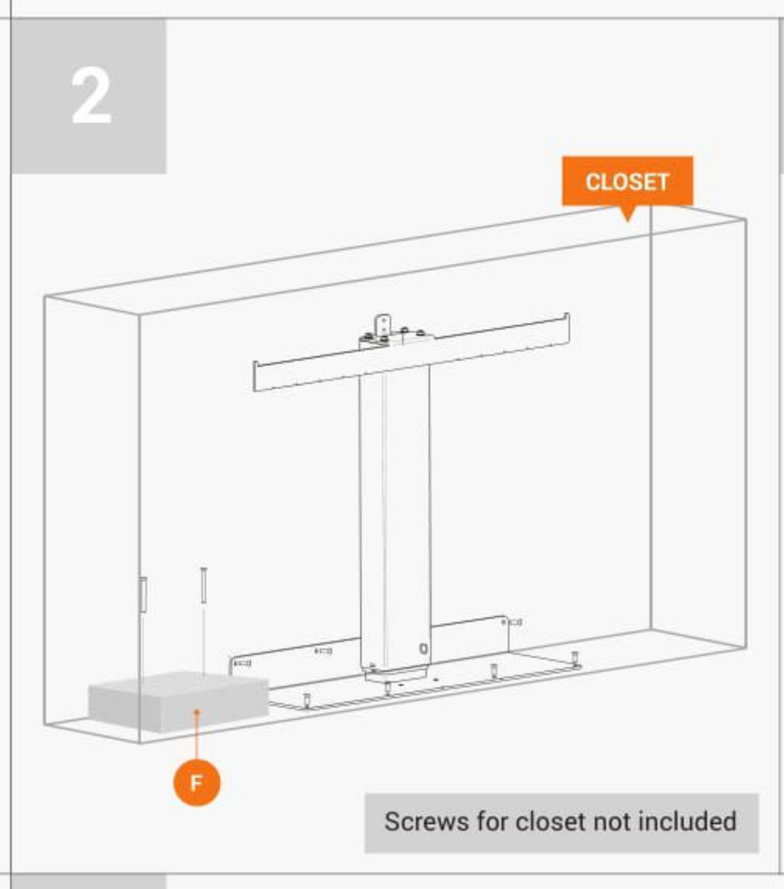

3

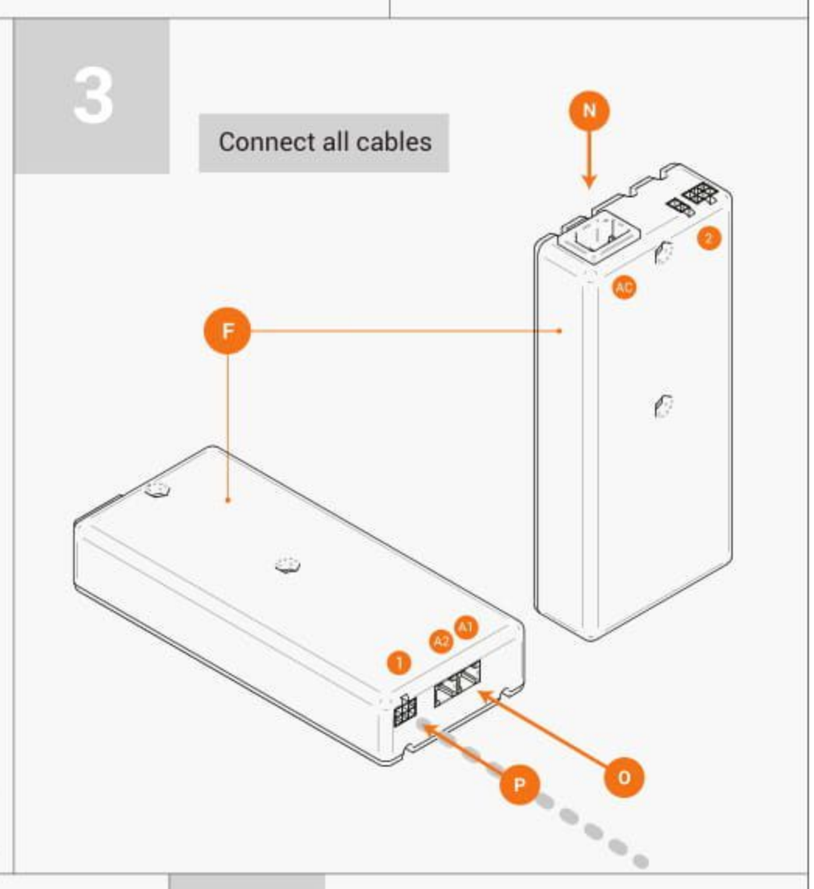

4

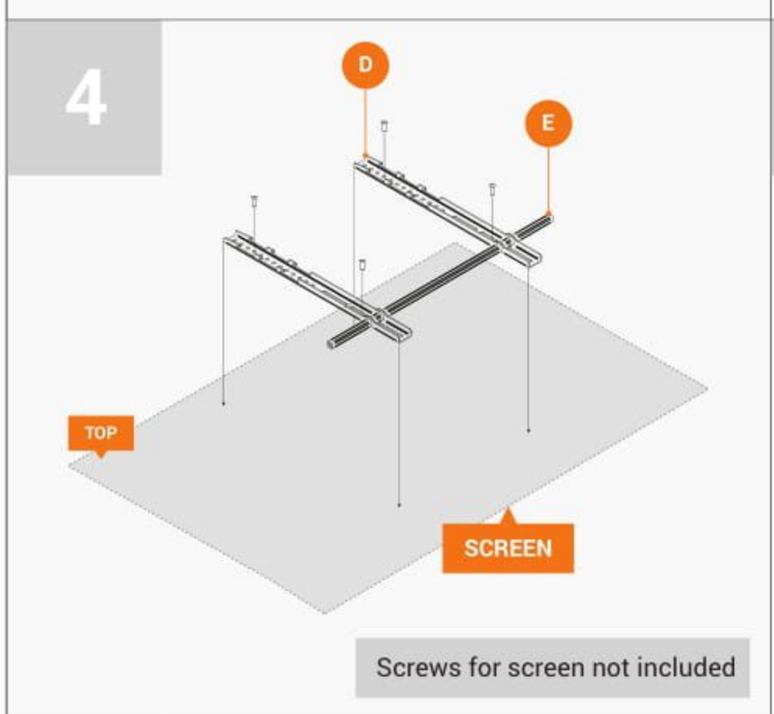

5

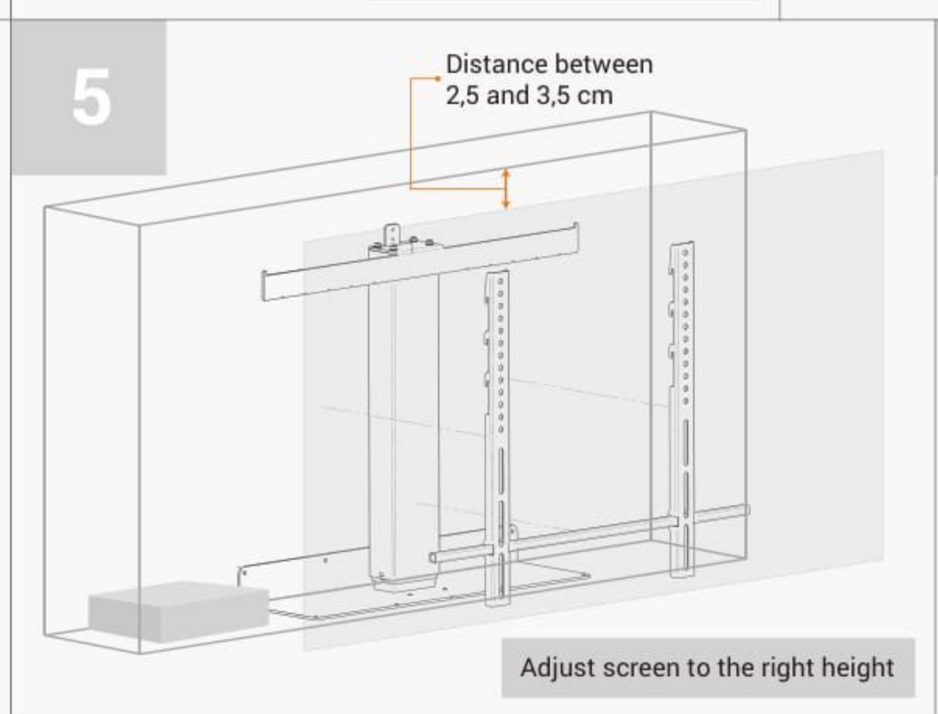

6

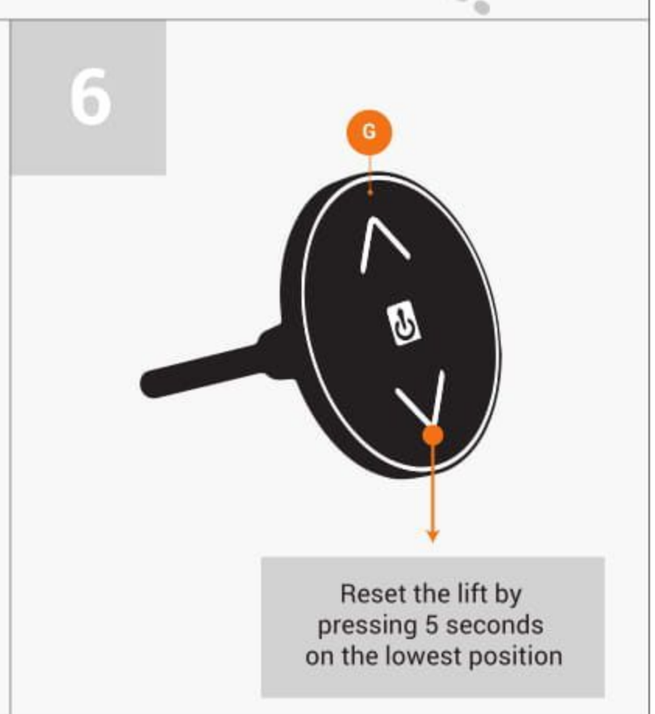

7

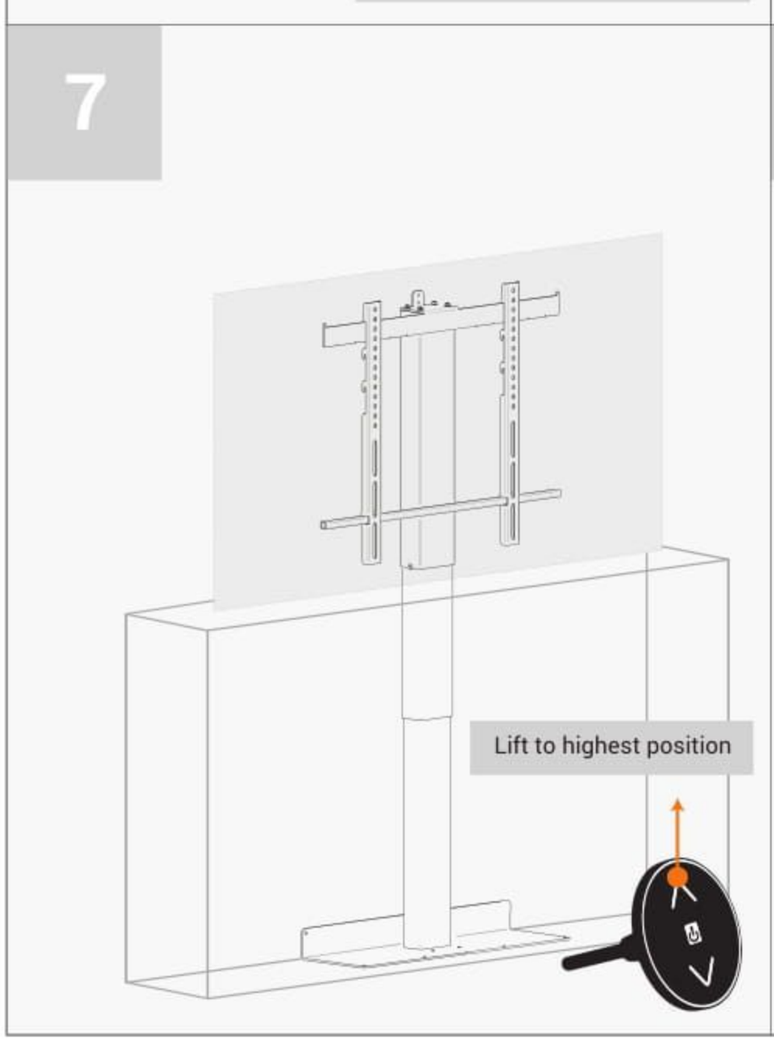

8

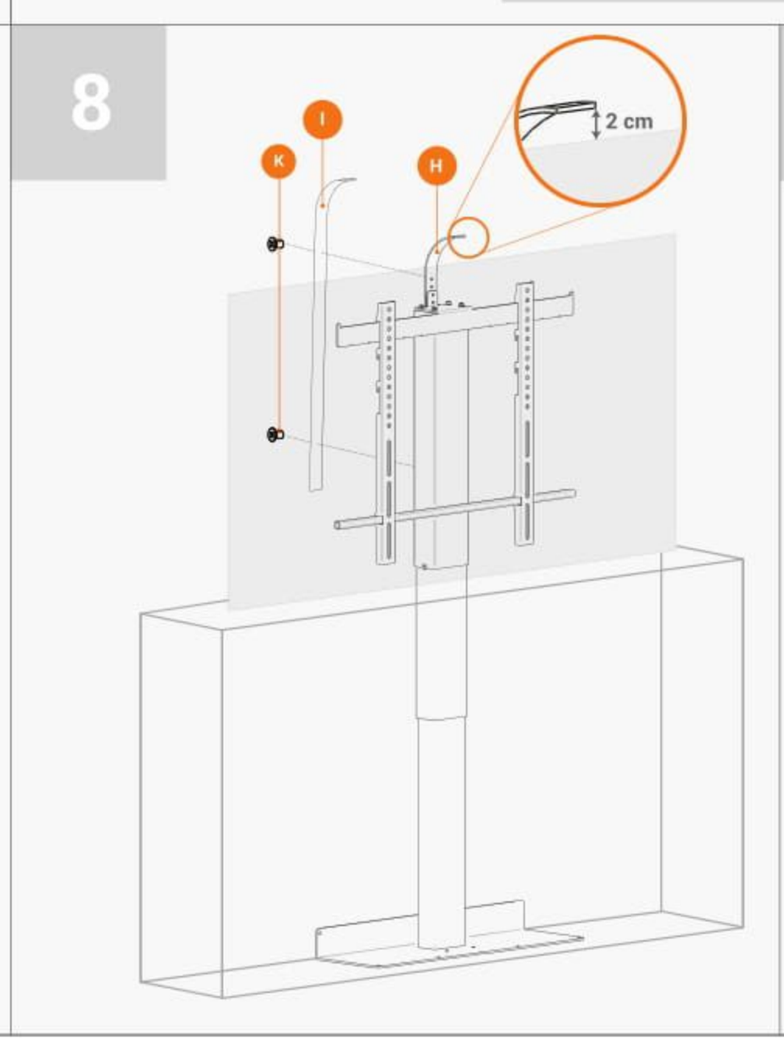

9

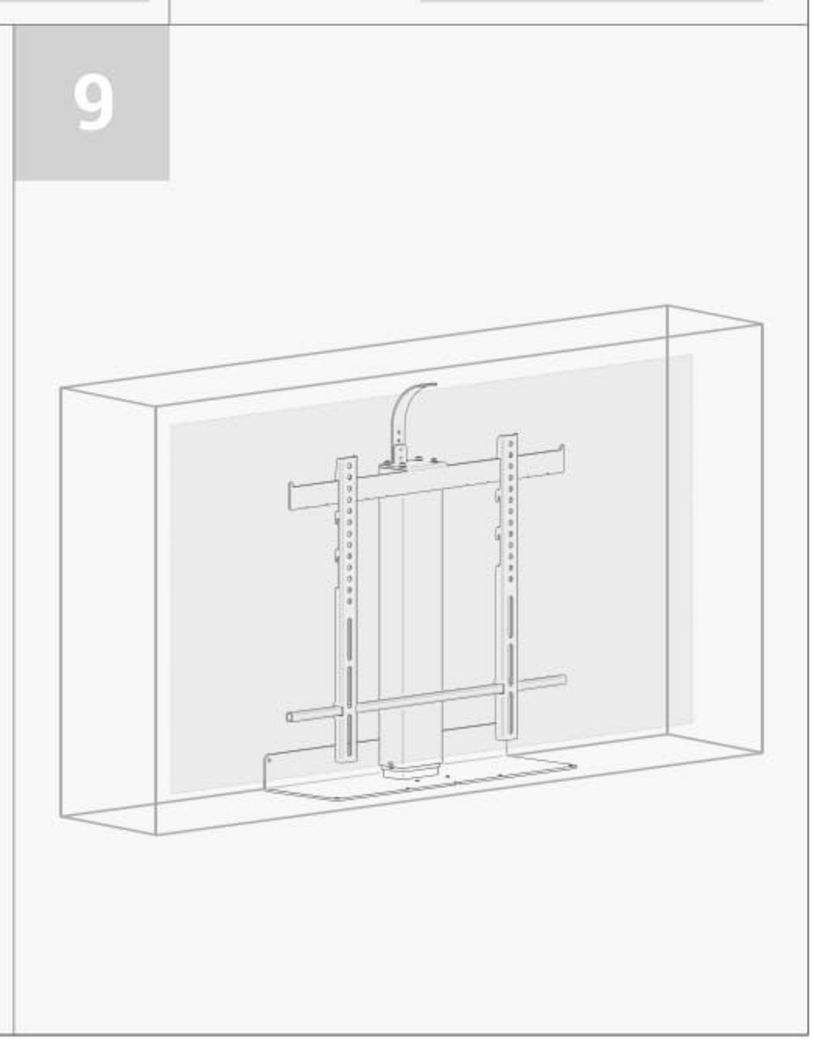

Made in Holland

www.duovorm.nl